Original Paper

Analysis of gases evolved by AZS refractories and by refractory/glass melt reactions. Techniques and results. Contribution to the bubble-forming mechanism of AZS material[1])

Fritz W. Krämer
Schott Glaswerke, Mainz (FRG)

To understand the bubble-forming mechanism at the interface AZS material/glass melt, gas-analyzing techniques are necessary. A review on gas bubble analysis techniques – gas chromatographic and mass spectrometric – as well as on hot extraction techniques is given.

Pore gas analyses of pristine, of sustained- and cyclically-heated AZS material without glass contact, analyses of bubbles of the exudation layer, analyses of bubbles in glass melts near the AZS material and hot extraction measurements show that at least two bubble-forming mechanisms take place at the interface refractory/glass melt. The first process is the opening of closed pores of the AZS material filled with nitrogen, oxygen and carbon dioxide due to the normal corrosion of the AZS blocks by the glass melt. The second mechanism is the oxygen release due to a redox process of multivalent ingredients of the refractory material when temperature is increased, which forms additional oxygen bubbles and knots in the glass melt. Both processes generate bubbles whose gas content is almost the same in the glass product.

Analyse von Gasen aus AZS-Steinen und aus der Reaktion Feuerfestmaterial/Glasschmelze. Methoden und Ergebnisse. Beitrag zum Mechanismus der Blasenbildung von AZS-Material

Um den Mechanismus der Blasenbildung an der Grenzfläche AZS-Material/Glasschmelze besser zu verstehen, werden Methoden zur Analyse von Gasen herangezogen. Zunächst wird ein Überblick über die gaschromatografischen und massenspektrometrischen Gasanalysentechniken und über die Heißextraktionsmethoden gegeben.

Gasanalysen der Poren von fabrikneuen, von einmal und von zyklisch erhitzten AZS-Steinen ohne Glaskontakt, Analysen von Blasen aus der Ausschwitzschicht, Analysen von Blasen in der Glasschmelze nahe des AZS-Materials und Heißextraktionsmessungen zeigen, daß mindestens zwei Blasenbildungsmechanismen an der Grenzfläche feuerfestes Material/Glasschmelze stattfinden. Der eine Prozeß läuft ab, wenn gasgefüllte (N_2, O_2, CO_2), geschlossene Poren des AZS-Materials durch die normale Korrosion der feuerfesten Steine durch die Glasschmelze geöffnet werden. Der zweite Mechanismus tritt bei Temperaturerhöhung ein, wenn auf Grund eines Redoxprozesses polyvalente Verunreinigungen des Feuerfestmaterials Sauerstoff abgeben und damit zusätzlich Sauerstoffblasen und Knoten in der Glasschmelze bilden. Beide Prozesse erzeugen Blasen, deren Gasinhalt im Produkt nahezu der gleiche ist.

1. Introduction

Gaseous inclusions belong to the most common defects affecting the quality of glass. Therefore, the elimination of these gas bubbles from glass melts is a topic of great interest to the glass industry. Gas-bubble analysis is the most important tool of bubble-fault diagnosis, especially when combined with bubble size distribution analyses and determination of the position of the bubbles in the glass product. By analyzing the gas content of the bubbles and with the knowledge of the interaction of the gases dissolved in the glass melt with these bubbles as well as the knowledge of how bubbles will change their content with temperature and time, the analyst can suggest to the production personnel the source and cause of bubble defects.

One of these bubble sources is the refractory material of the melting tanks, e.g. the fused-cast AZS blocks which form bubbles, stones and knots at the refractory/melt interface during the start-up period as well as during the furnace campaign [1 to 7].

The objective of this paper is twofold. First a review of the techniques of analyzing the gases evolved by the AZS blocks will be given. The techniques are the same as known in gas bubble defect diagnosis: gas chromatographic and mass spectrometric gas-bubble analysis for gaseous inclusions, and hot extraction techniques for measuring the dissolved gases.

The second objective is to get an idea what sort of bubbles are formed at the interface refractory/melt by means of these analyzing techniques. To get hints on the bubble-forming mechanism it is neccessary to examine AZS material with and without melt contact and to analyze pores of the material without molten glass – these results are not falsified by dissolved diffusing gases of the glass melt – as well as to analyze bubbles within the glass melt near the bubble-forming refractory.

Received February 20, 1992.

[1]) Presented at the Working Session of the Technical Committee 11 of the International Commission on Glass (ICG) in conjunction with the XV International Congress on Glass on July 2, 1989, in Leningrad (USSR).

Table 1. Detection limits (three times noise) of the gas-chromatographic technique for various gases

gas	gas volume[2]) in 10^{-12} l	corresponding bubble diameter in µm at 0.33 bar
CO_2	10	40
O_2	20	50
N_2	140	100
H_2	160	100
CO	200	105
Ar	200	105
SO_2	600	150
H_2O	4000	290

[2]) Investigated at normal conditions.

2. Gas-analyzing techniques

2.1. Gas-chromatographic techniques

In former times the gas-chromatographic technique as analyzing method for gas bubbles was very commonly used [8 and 9]. The gas bubble is broken in a carrier-gas stream, preferably helium. The released gases are separated in a dual parallel system of separation columns, packed with a molecular sieve 5 Å (Analabs, Inc., North Haven, CT (USA)) for hydrogen, oxygen, nitrogen and carbon oxide, and Porapak Q (Waters, Associates Inc., Framingham, MA (USA)) for carbon dioxide, water and sulfur dioxide, and subsequently flow into a detector. The most sensitive detector for very small gas amounts is the helium-ionization detector (HID) whose minimum detection limits are in the ppb region. The HID responds very sensitively to the purity of the carrier gas and to leaks in the gas system, therefore, in practice its detection limits are higher. There are also other requirements for a practical system, such as switching valves and calibration valves, dead volumes in tubing and valves, which restrict the minimal detection limit of actual analyzing apparatus. In spite of this, it should be and is possible to analyze routinely gas bubbles down to 0.1 mm in diameter for the gases: hydrogen, oxygen, nitrogen, carbon oxide and carbon dioxide. Detection limits determined for the gas-chromatographic technique are given in table 1.

The advantage of the gas-chromatographic technique is its high sensitivity and the high number of analyses a day (up to 60). The disadvantage is that only the just-mentioned gases can be easily detected. The separation of argon and oxygen is difficult, the detection of water and sulfur dioxide due to adsorption at walls and tubes is often not quantitative.

2.2. Mass-spectrometric techniques

Although mass spectrometers have been available for atomic physics research for decades, its application for gas-bubble analysis first became practical when relative inexpensive, commercial quadrupole mass spectrometers became available. All bubble-analysis systems using mass spectrometers [10] can be divided into two groups: dynamic or static systems. The static system is one in which the spectrometer's gas-handling manifold is valved off from the pumps, the bubble breaker is open to the mass spectrometer, and the content of the gas bubble, after having been broken, is directly expanded into the whole analyzing system. The partial pressures in the closed volume before and after the release of the sample are measured and the difference corresponds to the unknown gas-bubble content. The static system [11], with its relatively large volume, about 3 to 4 l, requires a good, clean system with ultra-high vacuum. Therefore, long pumping times and system bakeouts are necessary. On the other hand, due to the large volume it is possible to install a multiple-sample bubble breaker which reduces pumpdown time per analysis. Calibration has to be done with artificial bubbles of well-known content.

In the dynamic system, the bubble is broken in a very small volume ($\ll$ 1 ml) and the gas is released via a controlled orifice directly into the ionizer chamber without closing off the spectrometer from the high vacuum pump. The smaller the breaker volume, the faster the pumpout time – so it is important to balance the conductance of the orifice, the volume, and the spectrum-scan time which is very fast (about 3 to 10 ms/mass unit). Multiple sampling is not practical in a dynamic system, but fortunately long pumpdown times and bakeouts are not needed, so up to six bubbles can be analyzed in one working day. Calibration can be done with artificial bubbles or by the injection of a known volume of gases. For both mass-spectrometric systems bubbles down to 0.1 mm in diameter can be analyzed routinely. Since detection limits are in the order of 10^{-12} l, bubbles down to 0.05 mm have been analyzed, but the degree of difficulty increases with decreasing size.

The advantage of the mass-spectrometer technique is its high sensitivity and its specific gas detection. The disadvantage is that the attachment of gas fractions formed by the ion source to specific gases is sometimes not easy. The detection of small quantities of CO besides large quantities of N_2 is difficult. Also the detection of water is due to adsorption losses at walls not quantitative.

3. Analysis techniques of gases evolved at high temperatures

3.1. Vacuum hot extraction technique

At vacuum-hot extraction [12] the samples are heated up in vacuum at temperatures up to 1300 °C, the dissolved gases are released by this and can be carried to a gas chromatograph or to a mass spectrometer where they can be analyzed. There is a problem with

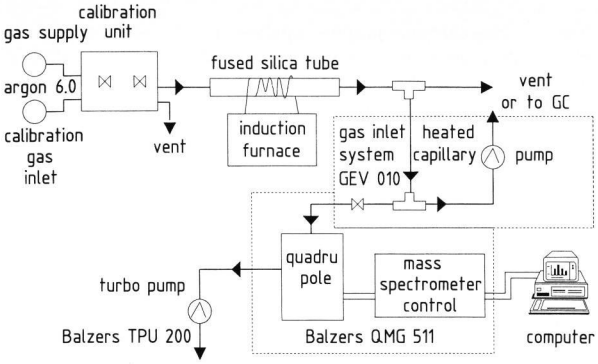

Figure 1. Experimental setup for the carrier gas extraction and analyzing technique.

heating up the sample. If the extraction vessel is heated from outside, the method is imperfect for exact determination of very small amounts of gas, as the extraction vessel already gets permeable at high temperatures for some gases. If the sample is heated inside the vessel, current lead-ins are a source of possible leakage while the vessel itself can be cooled. An elegant and simple method consists in the use of an induction furnace. No lead-ins are needed, and the vessel can be cooled. But unfortunately the platinum crucible can be oxidized by extracted oxygen.

The problem of the adsorption of extracted gas on evaporated glass components, which is a severe problem measuring the dissolved gases in glass melts with high alkali-oxide contents is not so great at refractories.

3.2. Carrier gas extraction technique

At carrier gas extraction method (figure 1) the samples are disintegrated in a carrier-gas stream of an inert gas (helium or argon). Alkali evaporation is less than at vacuum extraction, but the reaction temperatures have to be higher (about 1400 °C or more). Gas analysis can be done by gas chromatography or by mass spectrometry.

Nowadays substance-specific instruments are available which extract the gases in a carrier-gas stream, preferably oxygen, and which have an infrared-cell as a substance-specific detector.

These analyzers (Leco Corporation, St. Joseph, MI (USA); Rosemount GmbH & Co, Hanau (FRG)) with electronic balance and data output established themselves especially in iron and steel works and large-scale non-ferrous metals manufacturing, for control and quality assurance of metallurgical processes. With precaution and some restriction these analyzers can also be applied to measure dissolved gases in silicates, borates and refractories. The measuring range (in ppm) of these analyzers (for metals) are for carbon: 10 to 60 000, sulfur: 1 to 4 000, nitrogen: 1 to 5 000, hydrogen: 0.02 to 2 000.

Table 2. Gas-chromatographic analysis of the gas content in pores of AZS 41 (pristine material)

gas portions in vol.%			gas amount[3]) in 10^{-9} l
O_2	N_2	CO_2	
0	0	0	0
0	0	100	0.009
9.1	87.5	3.4	0.4
8.4	88.8	2.8	0.6
6.7	91.9	1.4	1.3

[3]) Investigated at normal conditions.

Table 3. Gas-chromatographic analysis of the gas content in pores of heated AZS 41

gas portions in vol.%			gas amount[4]) in 10^{-9} l
O_2	N_2	CO_2	
0	100	0	0.3
11.3	87.7	1	1.1
2.8	95.9	1.3	1.9
0	100	0	2.7

[4]) Investigated at normal conditions.

Chemically dissolved nitrogen can be determined by Neßler's reagent or by the Kjeldahl method. Newer examination methods are the Fourier transform infrared spectroscopy and the X-ray photoelectron spectroscopy, or nuclear reaction methods.

4. Gas analyses of inclusions, pores and bubbles

4.1. Pristine AZS material

Pristine fused-cast AZS material as received has no open porosity but there are some closed voids and pores which arise from the manufacturing process. These pores, which come to about 1 area% in the cross-section of the AZS blocks [4] are filled with gases which can be analyzed by a normal bubble-analysis technique (section 2.1.).

Table 2 shows the gas content of these pores of the AZS 41 material (composition (in wt%): 41 zirconia, 42 corundum and 17 glassy phase). Normally, an air-like composition with nitrogen as the main component as well as oxygen and carbon dioxide are found [4 and 5], but sometimes no gases could be detected. The gas amount is due to a refractory volume of about 1 mm^3.

4.2. Heated AZS material

If the AZS material is heated up an exudation of part of the glassy phase is produced. The composition (in wt%) of this glassy phase [6] is nearly 66 SiO_2, 23 Al_2O_3, 6 Na_2O, 3.6 ZrO_2, 0.3 Fe_2O_3 and 0.3 TiO_2.

Table 4. Gas-chromatographic analysis of the gas content in bubbles from the exudation layer AZS 32, heated three times from 20 to 1550 °C in air

gas portions in vol.%			bubble diameter in mm
O_2	N_2	CO_2	
21.1	78.9	0	0.24
37.4	62.6	0	0.32
70.1	29.9	0	0.35
59.3	40.7	0	0.40
62.6	37.4	0	0.56

Table 5. Gas-chromatographic analysis of the gas content in bubbles in tv glass investigated in an AZS 32 crucible after a temperature cycle (92 h at 1550 °C, decrease to 250 °C, increase to 1550 °C for 15 min)

gas portions in vol.%			bubble diameter in mm
O_2	N_2	CO_2	
0	100	0	0.21
8.6	91.4	0	0.23
93.5	6.3	0.2	0.32
100	0	0	0.36
28.5	64.7	6.8	0.40

This exudation is low when the refractory material is heated up only once to a certain temperature (sustained heating) – for example, the exudation glass phase is 1.5 wt% when heating AZS 41 to 1550 °C for 5 d – and is high – up to 8 wt% – if a cyclical heating from room temperature to 1550 °C is applied [6]. Increasing exudation corresponds to an increase in microstructure voids [4]. Therefore, the gas content of the pores of sustained heated AZS 41 material (1550 °C for 3 d, table 3) is almost the same as that of the pristine material but the gas amounts are a little bit larger.

At cyclical heating an exudation layer is visible at the AZS material and often bubbles are to be seen in this exudation layer [6]. Table 4 shows the gas content of these bubbles when AZS 32 material (composition (in wt%): 32 zirconia, 47 corundum and 21 glassy phase) was heated three times to 1550 °C from room temperature. Oxygen and nitrogen are detected, and the oxygen-nitrogen ratio is larger than that for normal air, that means that an oxygen generation within the refractory material is suggested.

4.3. Bubbles from the reaction glass melt/refractory

When heating AZS material in contact with a glass melt – the normal process refractories are used for – the behavior of the AZS material is similar to that without melt contact. Crucibles made of AZS material (AZS 32 and AZS 41) are thrilled, and filled with television-panel glass. The crucibles are heated to 1550 °C in an electric-heated furnace for 92 h, then the temperature was decreased to 250 °C and immediately heated to 1550 °C for 15 min [6]. Many bubbles, stones and knots are formed by this procedure at the refractory/melt interface. The newly formed bubbles within the glass melt could be analyzed. Table 5 shows the gas content of these bubbles formed with AZS 32 refractory and table 6 that with AZS 41. With both refractories bubbles with a high percentage of oxygen are produced.

Table 6. Gas-chromatographic analysis of the gas content in bubbles in tv glass investigated in an AZS 41 crucible after a temperature cycle (92 h at 1550 °C, decrease to 250 °C, increase to 1550 °C for 15 min)

gas portions in vol.%			bubble diameter in mm
O_2	N_2	CO_2	
93.8	6.2	0	0.45
75.7	24.3	0	0.50
98.6	1.4	0	0.54
95.3	4.7	0	0.73

Table 7. Mass-spectrometric detection of different gases of AZS 41 using argon as carrier gas

gas	amount[5]) in µl gas/g refractory			
	first heating		cyclical heating 1080 to 1550 °C while cooling purging with	
	20 to 1080 °C	1080 to 1530 °C	argon	synthetic air
H_2	95	0	3	3.5
H_2O	22	0	2	1
CO	15	0	0	0.5
N_2	0.3	0	0	0
O_2	0	3.3	3.5	20
CO_2	3.5	0	0.2	0.7

[5]) Investigated at normal conditions.

5. Determination of gases evolved at high temperatures

5.1. Vacuum hot extraction measurement

If AZS material is heated up in vacuum, hydrogen, water vapor, carbon oxide and carbon dioxide are evolved. It is reported [13] that at 1600 °C with a single heating up about 1 ml gas is released and that hydrogen is the main component. The composition of the gases evolved is approximately (in vol.%) 50 to 70 H_2, 10 to 15 CO, about 2 CO_2 and small amounts of air. Similar results are gotten by the author's vacuum hot extraction measurements.

Contrary to pore analyses of the AZS material where large amounts of nitrogen are found, it is astonishing that at hot extraction measurements only small amounts of nitrogen could be determined.

5.2. Carrier gas extraction measurement

To be sure that the hydrogen evolution is not a matter of vacuum, AZS material was also heated in argon. Here also one must distinguish between the first heating and a cyclical heating. At a first heating up to 1080 °C with AZS 41 (table 7) above all hydrogen, water and carbon oxide, and small amounts of nitrogen are evolved. At a further heating from 1080 to 1530 °C only oxygen is released. The same gases and the same gas ratios but smaller amounts are evolved for the second and a further heating if a cyclical heating up to 1550 °C is applied and if a subsequent cooling down in an argon atmosphere is done.

But if cyclical heating of AZS material is applied up to 1550 °C with a subsequent cooling down in synthetic air atmosphere a large additional amount of oxygen is released between 1100 and 1550 °C (table 7). This means while cooling down the AZS material in an oxygen-containing atmosphere, oxygen is absorbed by the refractory, and it is supposed that this can only be done by the redox reaction of a multivalent ion, like that of iron or titanium, which are ingredients of the AZS material. At heating the AZS material above 1100 °C the chemically absorbed oxygen is released via the redox reaction as is known at fining with multivalent ions in the glass industry. A similar mechanism of oxygen formation due to redox reactions in ZS refractories was proposed recently [14].

With AZS 32 material similar gas reactions take place but the amount of gases released is smaller.

With commercially available substance specific analyzing instruments which can heat samples up to 3000 °C, sulfur dioxide, carbon dioxide and chemically bonded nitrogen could be detected in the AZS 41 material. These gas amounts are equivalent to 180 ppm SO_3, 260 ppm C and 18 ppm N.

Even with Neßler's reagent, nitrides analyzed as NH_4^+, could be qualitatively detected in AZS material.

These results confirm the fear that inspite the oxidizing conditions at manufacturing AZS material nowadays, reducing ingredients as carbon and nitrides as contaminants of AZS materials are found, which oxidized, cause a gas release and with that a bubble formation.

6. Discussion

Based on the obtained results the following idea of bubble formation at the AZS material was obtained: The raw materials for manufacturing AZS blocks contain nitrides, carbides or carbon and sulfur as contaminants. At fusing these materials in an oxidizing atmosphere part of these contaminants are oxidized whereas the larger part escapes as gaseous reactants. But part of these contaminants remain dissolved in the glassy phase of the refractory, another part forms closed pores or blisters with the known gas content (table 2).

At first heating of the AZS blocks (start-up period), but also during the normal furnace campaign, further gaseous reactants of the same content (table 3) are released. Bubbles with high nitrogen content (89 to 100 vol.% N_2, residues of O_2 and CO_2) are formed in the glass melt if these closed pores are opened by the normal corrosion process of the AZS material by the glass melt.

Additional bubbles are formed if the temperature of the AZS blocks is increased. Due to redox reactions of the multivalent iron and titanium ions, the redox equilibrium is shifted to the lower valency state at heating AZS material, and oxygen is evolved within the glassy phase. This oxygen release forms oxygen bubbles within the glassy phase and because of the resulting increase in volume, part of the glassy phase is pressed out of the refractory matrix.

Due to this exudation, glassy phase, oxygen bubbles and the content of the opened pores (80 to 100 vol.% N_2) of the reaction zone at the interface AZS material/glass melt are pressed into the glass melt, whereby bubbles with oxygen, nitrogen and carbon dioxide (tables 4 to 6) and knots are formed. Obviously, the bubble-forming rate at AZS material due to a redox process is higher than that with normal corrosion because this is an additional process, also documented by the more glassy phase exuded (up to 8.5 wt%) with cyclical heating of AZS material.

As evidently the redox reaction is reversible within the glassy phase – oxygen is resorbed at a temperature decrease (section 5.2.) – this pumping mechanism of oxygen is activated with each temperature increase, e.g. with a change in energy distribution of the melting tank, with a change of the pull or with a change of currents within the tank. That means that there is a possibility that bubbles and knots are formed with each temperature increase.

This bubble- and knot-forming mechanism can be minimized if the amount of Fe_2O_3 and TiO_2, can be decreased.

Concerning the bubble content which can be analyzed in the product, oxygen from bubbles containing oxygen and nitrogen can be resorbed by the glass melt at a temperature decrease if this glass melt contains multivalent ions (as refining agent or as contaminants). That is why in the product often bubbles with high nitrogen and small carbon dioxide amounts are analyzed which are formed at the interface AZS material/glass melt due to a redox reaction and due to the opening of pores by the normal corrosion of the AZS material.

7. References

[1] Meyer, H.; Poehnitzsch, H.: Über die Ursache des Glasaustritts und der Blasenbildung an schmelzgegossenen Steinen bei hohen Temperaturen. Glastech. Ber. **38** (1965) no. 10, p. 393–397.

[2] Busby, T. S.: Gas bubbles from refractories. Glass Technol. **20** (1979) no. 3, p. 91–95.

[3] Woolley, F. E.: Blistering of refractories – laboratory tests. Presented at the Working Session of the Technical Committee 11 of the International Commission on Glass (ICG) in conjunction with the XV International Congress on Glass on July 2, 1989, in Leningrad (USSR).

[4] Walrod, D.: A study of the driving force behind AZS glass phase exudation. Presented at the Working Session of the Technical Committee 11 of the International Commission on Glass (ICG) in conjunction with the XV International Congress on Glass on July 2, 1989, in Leningrad (USSR).

[5] Swarts, E. L.: Bubble generation at glass/refractory interfaces: A review of fundamental mechanisms and practical considerations. Glastech. Ber. **65** (1992) no. 4, p. 87–92.

[6] Dunkl, M.: Studies on the glassy and reaction phases given off by fused-cast AZS blocks and their effects on glass quality. Glastech. Ber. **62** (1989) no. 11, p. 389–395.

[7] Dunkl, M.: Investigation of the liberation of glassy phase from fused cast AZS materials. Glastech. Ber. **63 K** (1990) p. 370–380.

[8] Mulfinger, H.-O.: Analyse des Inhaltes von Gasblasen im Glas. Glastech. Ber. **44** (1971) no. 11, p. 467–473.

[9] Mulfinger, H.-O.; Krämer, F.: Analyse von Blasen und Gasen im Glas. In: Jebsen-Marwedel, H.; Brückner, R. (eds.): Glastechnische Fabrikationsfehler. 3rd ed. Berlin, Heidelberg, New York: Springer 1980. p. 162–179.

[10] Altemose, V. O.: Mass spectrometry for the analysis of bubbles in glass. In: Gas bubbles in glass. Prepared by Committee 14 of the International Commission on Glass, Charleroi: Institut du Verre 1985. p. 64–73.

[11] Shick, R. L.; Swarts, E. L.: Mass spectrometric analysis of bubbles in glass. J. Am. Ceram. Soc. **65** (1982) no. 12, p. 594–597.

[12] Meyer, H.; Frischat, G. H.; Krämer, F. et al.: Diffusion von Stickstoff in Glasschmelzen für den Fall physikalischer Lösung. In: XIth International Congress on Glass, Prague 1977. Proc. Vol. 2. Prague: ČVTS Dům tech. 1977. p. 317–326.

[13] Krings, A., MAGMALOX GmbH, Köln: Pers. commun.

[14] Baucke, F. G. K.; Röth, G.: Electrochemical mechanism of the oxygen bubble formation at the interface between oxidic melts and zirconium silicate refractories. Glastech. Ber. **61** (1988) no. 5, p. 109–118.

92R0239