Original Paper

Construction of an experimental unit for the mechanical colour sorting of non-crushed recycled container glass

Karl-Heinz Gitzhofer

Hüttentechnische Vereinigung der Deutschen Glasindustrie e.V. (HVG), Frankfurt/M. (FRG)

The continuous growth of container glass recycling requires additional measures for the colour separation of waste glass. This paper presents the results of a research programme partly financed by the Umweltbundesamt (Federal Office for the Environment), Berlin, which deals with the mechanical colour separation of recycled container glass. It was the task of this research programme to develop and build a pilot unit which would function under operational conditions. For economic reasons and in order to limit the technological input, the process is designed for the sorting of whole bottles and large pieces of cullet. Before starting colour sorting, small pieces of glass are screened off. The larger material is aligned in the conveyor direction and is fed in single file to the colour recognition and ejector systems. After colour recognition by a light transmission measurement, the bottles or glass pieces are separated according to colour, in free fall, by mechanical ejection of the samples. The colours flint, amber, green and opaque are differentiated.

Bau einer Versuchsanlage zur mechanischen Farbtrennung von unzerkleinertem Recycling-Hohlglas

Das stetig anwachsende Hohlglas-Recyclingaufkommen erfordert zusätzliche Maßnahmen zur Farbtrennung von Altglas. In der vorliegenden Arbeit sind die Ergebnisse eines vom Umweltbundesamt, Berlin, mitfinanzierten Forschungsvorhabens aufgeführt, das sich mit der mechanischen Farbsortierung von Recycling-Hohlglas befaßt. Ziel dieses Forschungsvorhabens war es, eine unter Praxisbedingungen funktionierende Versuchsanlage zu entwickeln und zu bauen. Aus Wirtschaftlichkeitsgründen und zur Begrenzung des technischen Aufwandes ist der Verfahrensablauf auf das Aussortieren von ganzen Flaschen und großen Bruchstücken ausgelegt. Bevor die Farbsortierung erfolgt, wird der Kleinanteil abgesiebt. Das Grobgut wird in Förderrichtung ausgerichtet und vereinzelt dem Farberkennungs- und Auswurfsystem zugeführt. Nach der Farberkennung durch Transmissionsmessung werden die Flaschen oder Scherben im freien Fall, durch mechanische Auslenkung der Prüflinge aus ihrer Flugbahn, nach Farben separiert. Es werden die Farben Weiß, Braun, Grün und Opak unterschieden.

1. Introduction

An environmentally desirable increase in the continuous growth of cullet recycling requires additional measures for the colour sorting of glass. Because cullet is a relatively low-valued sorted material with a narrow economic margin, a solution must be found for achieving colour sorting, while at the same time avoiding high investment and operating costs. It was the aim of this investigation to develop and build a practically functioning pilot plant which is able to sort whole bottles and large pieces of cullet according to colour.

The increasing burdening of the environment with waste products resulted in the collection and processing of cullet at the beginning of the seventies and its return to the glass plants as a raw material [1]. The collected quantity of cullet (including foreign imported cullet) has increased steadily and in 1989 reached the figure of 1.54 mill. t. The container glass industry has promised to increase the recycled quantity to 2 mill. t by 1995 [2].

Received 2 April 1990.
Eine deutsche Fassung dieser Arbeit liegt in der Bibliothek der Deutschen Glastechnischen Gesellschaft, Mendelssohnstraße 75–77, W-6000 Frankfurt 1, vor.

From the point of view of the glass factories, waste glass, as compared to factory cullet, has the disadvantage of being dirty and largely not colour-sorted, which restricts its use to colour glass furnaces, particularly to the green glass furnace. However, nowadays, the absorption capacity of the green glass melts are already exhausted, with cullet additions of about 90 %.

As shown in figures 1a and b, container glass is almost exclusively produced in the colours flint, amber and green. About 47 % of the container glass production is flint glass (the colour half-white is included), the green glass share lies at about 31 %, the amber glass share at 22 %. While cullet addition in green glass already amounts to 90 %, in amber glass only a mean of 11 %, and in flint glass 16 % of foreign cullet is being added. However, there are a few glass plants which, by carrying out computer-aided preventative glass batch corrections based on the statistical analytical supervision of the raw materials and of the cullet, add up to 40 % of colour-separated cullet to flint glass and 50 % to amber glass. The absorption capacity for amber and flint cullet is, therefore, far from being exhausted.

However, the purity of the colour-sorted foreign cullet is of utmost importance. Because green and

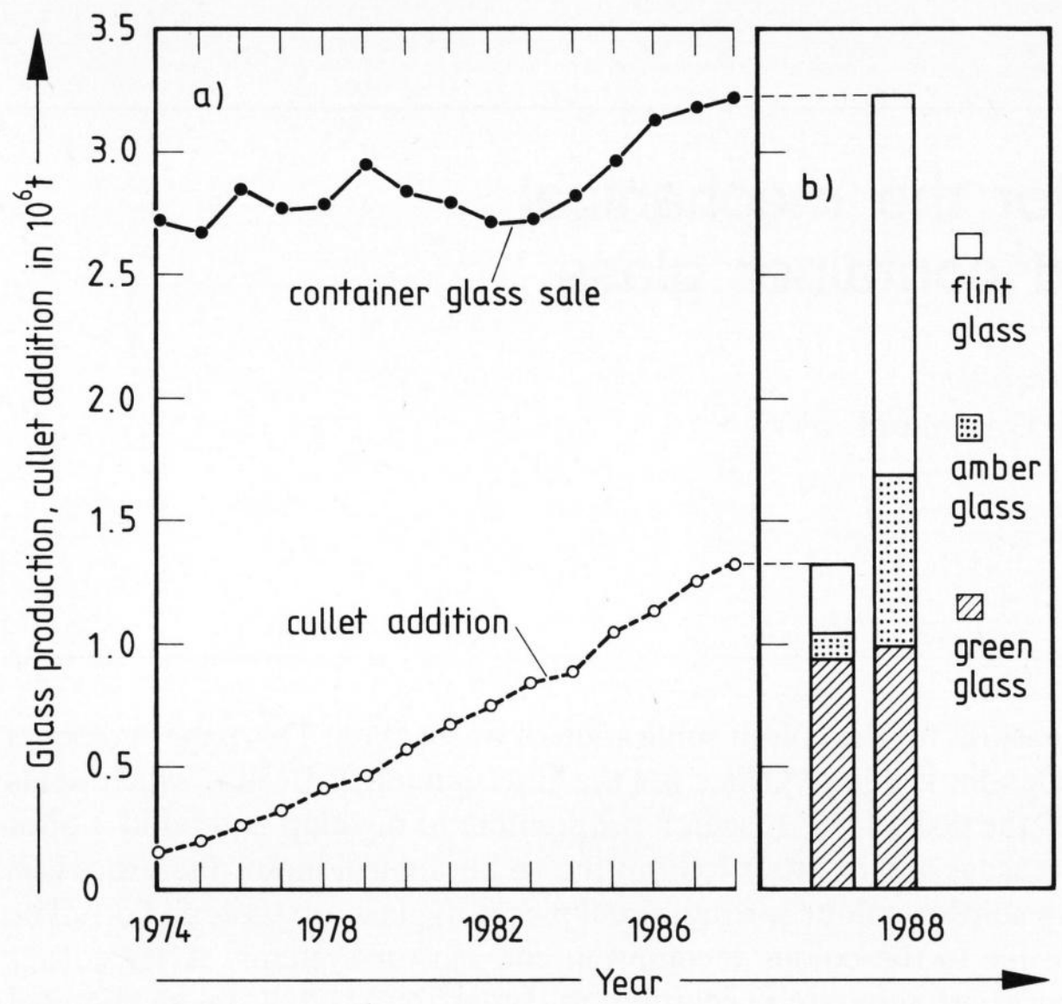

Figures 1a and b. Recycled glass processing in the container glass industry [2], a) variation of the container glass sale and the cullet addition, respectively, from 1974 to 1988, b) glass composition of the container glass sale and the cullet addition, respectively, in 1988.

amber cullet result in undesired colour tints in the flint glass melt, pure flint cullet should be used if possible. According to production-based data, the portion of undesired colours in the flint melt should not be higher than 0.5 to 0.25 %. Some container glass manufacturers even insist on less than 50 g undesired colour per ton of cullet. In order to obtain a constant colour in amber glass melts it is most important to keep the green glass content as low as possible. Here, practical values between 2 and 3 % are being documented.

The environmentally desirable increase of cullet recycling consequently requires that colour-sorted cullet is made available in increasing quantities. There are two possibilities to achieve this:

a) extending the collection of container glass according to colour, or,

b) colour sorting within the scope of a glass-recycling plant.

Colour sorting at the collecting container is dependent on the discipline of the individual depositor. Experience gathered in recent years shows that the success of collecting colour-sorted cullet differs widely from region to region. In the southern region of West Germany, colour-sorted cullet has been successfully collected for more than a decade. However, it must be assumed that when one container or compartment overflows the user will then dispose his waste glass unsorted and thus cancel out the colour-separation effect. The cullet-sorting plants must be able to process the pre-sorted cullet separately, charge by charge. A final resorting by hand for wrong colours is indispensible here.

2. Technological state of colour-sorting units for recycled glass

In the late sixties, tests were already being carried out on the mechanical colour sorting of recycled glass. For this purpose, machines were applied which were being used for colour sorting mineral raw materials and in the food industry. Here, the reflected light from the material being sorted was analysed for a determination of the material colour. Unfortunately, the colour recognition of glass by a reflection measurement was not successful.

2.1. Colour-sorting unit for cullet of small grain size

In 1981, an investigation programme promoted by the Federal Ministry for Research and Technology was published [3] which dealt with the development of a colour-sorting device for crushed cullet. The sorting process was carried out, after colour recognition through a transmission measurement, by means of compressed air blasts. The high technological expenditure, particularly the required washing of the cullet, the unsatisfactory sorting results and a low output prevented the large-scale commercial use of this device.

Based on the development stage reached by this research programme, the unit has been further developed by the Institut für Aufbereitung, Rhein.-Westf. Tech. Hochschule, Aachen (FRG), and is at present being tested as a pilot plant by Siemens AG (Zweigniederlassung Frankfurt, Fertigungs- und Servicezentrum, Frankfurt/M. (FRG)). A further unit [4] started operating in 1988 in a cullet-sorting plant (Alba, at Glashütte Budenheim (FRG)) on a field trial basis.

2.2. Colour-sorting plants for whole bottles

In all of these units, colour recognition is obtained via a light transmission measurement.

The research project "Container colour-sorting equipment" supported by the Federal Ministry for Research and Technology was presented during the "Entsorga 88" (Fachmesse für Entsorgung, Essen (FRG) 1988). This concerns a glass-collecting unit which automatically starts sorting according to glass colour and foreign matter, directly behind the filling hole. Functional efficiency and economic profitability have been tested by the patentee (MABEG, Herne (FRG)) in a field trial.

The glass-recycling KOMI (Koppelberg & Migl KG, Jettingen (FRG)) runs a colour-sorting unit on the company's premises. Initially the unit separates large and small cullet. Then the large cullet (whole bottles and large pieces) are spread onto 4 lines. Each line consists of a vibratory transport system which

feeds the bottles at a speed of approximately 0.3 m/s over a total of 3 colour-recognition and ejection stations. Here the colours flint, amber and green are sorted. Opaque test specimens pass through the unit without any reaction from the ejection stations. The output capacity per line amounts to 700 kg cullet/h and requires a high equipment investment.

At the "Entsorga 88" exhibition, the machine company BEZNER, Ravensburg (FRG), showed a video film of a pilot plant for colour separation. Whole glass containers, transported in line on a slow-moving conveyor belt, are picked up by two robot arms, passed over an optical colour-recognition system and ejected onto the respective sorting conveyor. The trial unit of the Austrian company Andritz, Graz (Austria), separates the test pieces after colour recognition during free fall by compressed air blasts.

Detailed test results are not available from any of the described units.

3. Design and operating method of the HVG pilot plant for colour sorting

In order to limit the technological investment and to achieve an economic output efficiency, only whole bottles and large glass pieces should be colour-separated. The pilot plant developed by the HVG and the experience gained with it should permit the design of a large-scale unit in full working order.

3.1. Description of the colour-recognition system

The colour-recognition system (Plöckl Industrieoptik, München (FRG)) is matched to the special requirements of recycled glass colour detection. Interfering influences from contaminants, caps and labels are largely eliminated. The unit is comprised of a transmitter, a receiver and evaluation electronics.

In the transmitter the light from a small halogen lamp is converted by a rotating modulating disc into chopped light at 1.2 kHz. By means of a condensor and a lense, a light spot with the dimensions (13×6) mm^2 is produced at a distance of 450 mm from the transmitter, through which the container has to pass. The receiver, placed at a distance of 800 mm from the transmitter, guides the light passed through the bottles (transmission measurement) into a colour-separation system. In this process, the colour of the glass produces a characteristic curve of the spectral transmission which forms the sorting criteria. Three photo-receivers for the colours blue, green and red transform this light into electrical current which, after amplification, is fed to the evaluation electronics. The evaluation electronics image the light density values for each colour in relation to air, before the bottles enter the light spot. This takes into account the contamination of the optical boundary surfaces. After the testpiece has left the light spot, the ratio of the three density values determines the colour of the tested bottle. Due to the simultaneous measurement at various wavelength ranges, there is no influence on the colour determination from neutral-colour contamination. The lower limit of colour evaluation lies at 1 ‰ light transmittance. The colours flint, amber, green and opaque are differentiated. By means of a setting knob, "half-white" can be sorted into flint or green. The colours to be separated by the subsequent sorting mechanism are determined by means of a selector switch. A pointer instrument shows the signal voltages of the three photo-receivers. Thus, the contamination of the optical boundary surfaces can be supervised. After the bottle or cullet has left the testing area, the signal for the ejector station is given after a preselectable time (0 to 150 ms).

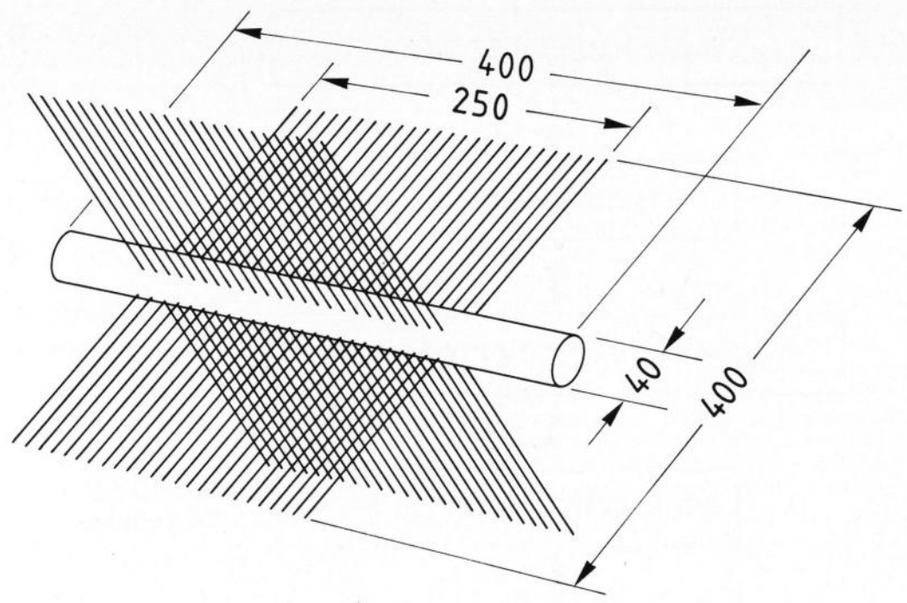

Figure 2. Quick-acting turnstile for bottle or cullet ejection. The dimensions are given in mm.

3.2. Description of the ejector system

The ejector mechanism consists of a turnstile fitted with spring-steel wires which is operated by a 5-phase stepping motor with a transfer case. Figure 2 shows the set-up of the turnstile. The axle of the turnstile consists of a polyamide shaft. The shaft is equipped with 50 spring-steel wires, i.e. 25 in a row. The distance of the wires from each other is 10 mm. The wires are 400 mm long (200 mm lever arm) and 1.5 or 2 mm thick. The total weight of the turnstile amounts to approximately 1 kg. The system achieves a maximum of 6 working cycles per second with one working cycle corresponding to a 90° turn of the ejection mechanism to the right or left. By means of a module, three colours can be sorted. With an optimum infeed the theoretical throughput capacity can be calculated at approximately 5 t glass/h. The calculation is based on a mean bottle weight of 250 g.

The colour detector and the ejector system can be arranged in a compact manner. This results in a modular design which by parallel connections allows the adjustment of the throughput capacity of the total system to individual requirements.

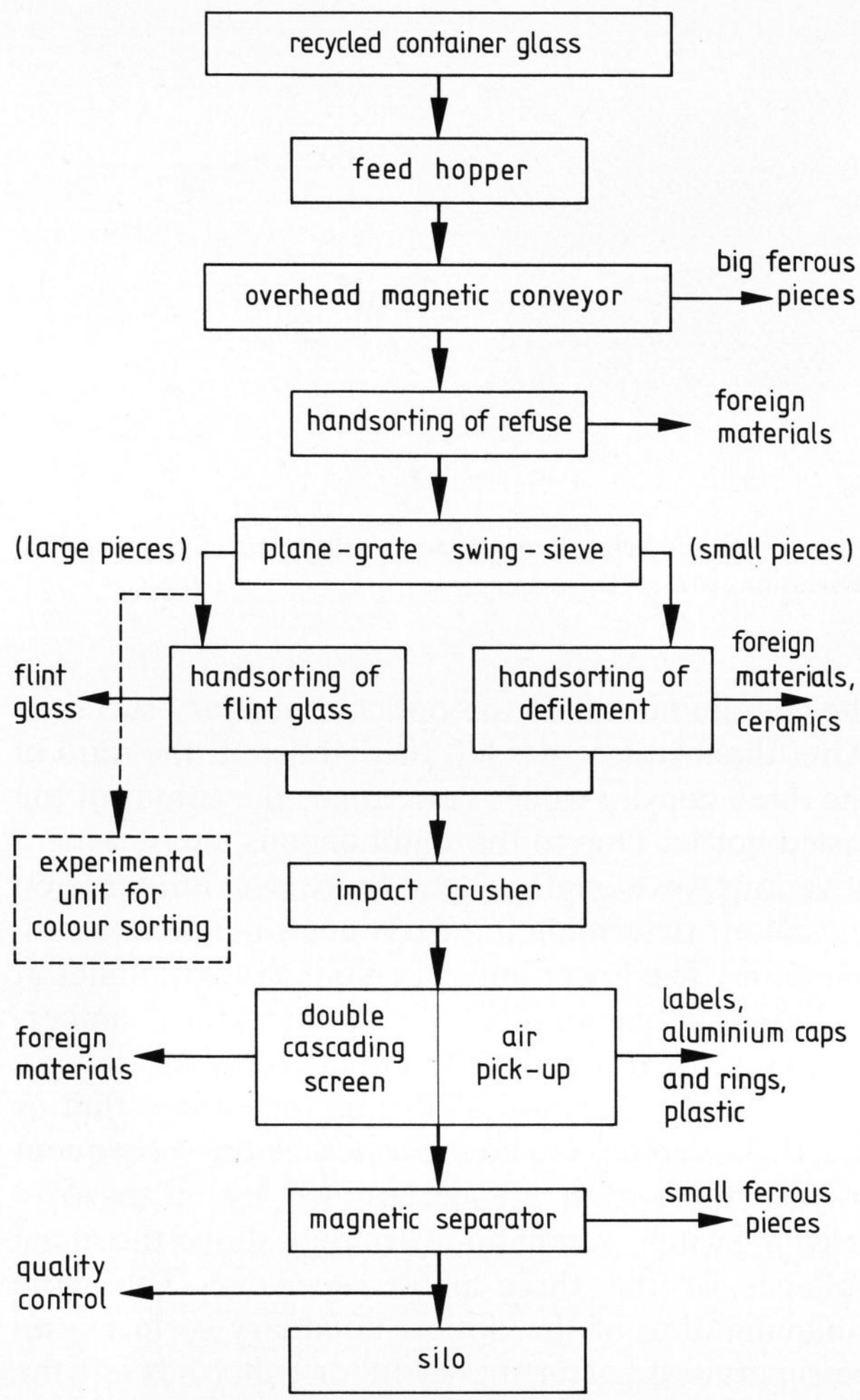

Figure 3. Operation cycle of the glass-recycling plant at Heye-Glas, Germersheim (FRG).

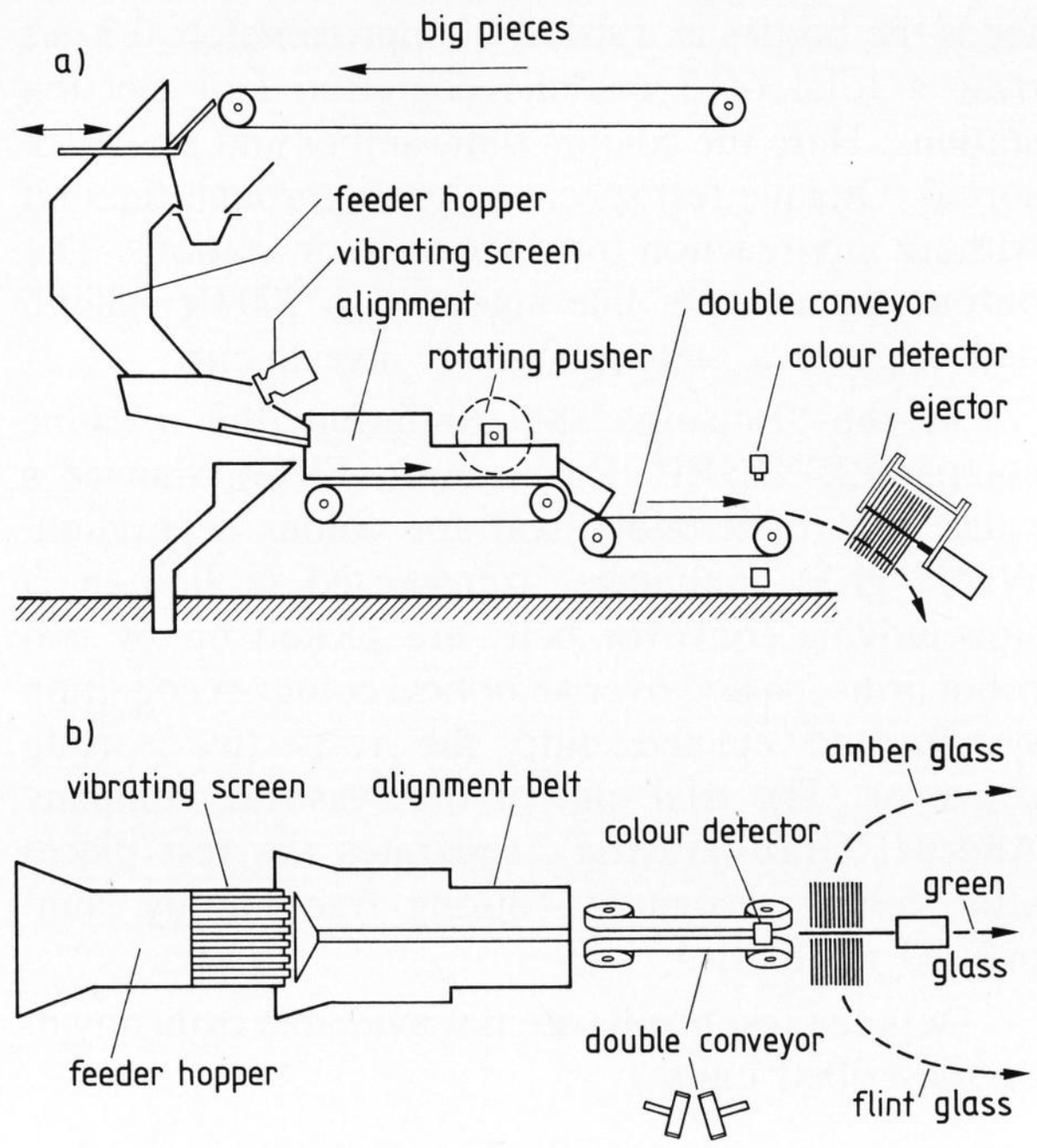

Figures 4a and b. Experimental unit for colour sorting of recycled container glass, a) side view, b) top view.

3.3. Description of the conveyor-unit components

An acceptable working of the described colour-sorting unit depends on the quality of the single-feeding of the material being sorted. For this reason the order for the construction of the single-feeding unit and the complete conveyor components was placed with the engineering office Wurtscheid, Düsseldorf (FRG). The pilot unit for colour separation was integrated into an existing waste glass processing plant (Heye-Glas, Germersheim (FRG)). The operational sequence of this glass-recycling plant is shown in figure 3.

Nowadays, modern glass-recycling plants work with an additional all-metal separator. Here the broken cullet passes an inductively operating tracer coil which gives an impulse to the connected sorting mechanism if metal is detected. At the moment, development work is being carried out to eliminate other opaque contaminations (ceramics, porcelain fragments, stones, etc.) with the help of photomechanical sorting devices.

The cullet-processing plant in Germersheim rests on supports about 6 m above ground level. Hence, the required dropping height for a filling of the waste container and the flint-glass box is achieved. In order to install the pilot unit for colour separation, a false floor was installed at a height of 3.5 m above the flint-glass box. The working sequence of this pilot unit is shown in diagrammatic sketches in figures 4a and b.

At a convenient position (see figure 3) in the waste glass processing plant, part of the glass stream which has previously been cleaned by handsorting of refuse and coarse ceramics is diverted. This is achieved with a plane-grate swing-sieve and handles predominantly whole bottles and large pieces of cullet. Unfortunately, due to the local situation, the singling-device could not be installed directly at the transfer position of the processing plant to the experimental unit. An intermediate bunker had to be placed in front. This component leads, of course, to additional, undesired glass breakage. In order to avoid glass breakage and to keep the portion of small cullet as low as possible, the transfer position is constructed in such a manner that it results in a low falling height. Once the bunker is filled it must remain filled and the bunker overflow should take its planned route to the impact crusher. This procedure ensures that for testing purposes, ample sorting material is always at hand. During the testing phase flint glass sorting by hand is eliminated. After passing the plane-plate swing-sieve the bottles come to the so-called alignment belt. Here the bottles are aligned in the transportation direction and, densely packed horizontally, are led to the double-belt conveyor. A rotating push-bar is installed above the alignment belt to push back any piled-up bottles. Via a chute, the

bottles and cullet, respectively, are guided to the double-belt conveyor. This conveyer has a multiple task:

a) for one thing, due to the higher speed of the double conveyor as compared to the aligment belt, the ware is spread out into single components,

b) at the same time the bottles are centred because the two belts can be arranged at a certain angle to each other. This centering enables, on the one hand, accurate transport to the ejector system; on the other hand, centering is necessary for an exact scanning of the bottle,

c) furthermore, an additional and desirable separation of both existing and new broken glass takes place at the double conveyor.

Both the transport speed at the plane-plate swing-sieve as well as the conveyor speed are finitely variable.

The sorting process takes place in free fall. For this purpose the bottles are scanned shortly before leaving the double belt, are classified according to colour and are then, immediately after leaving the double conveyor, sorted by the ejection turnstile in free fall, according to colour. The receiver part of the colour-recognition device, which is placed under the double conveyor, is protected against falling cullet by a chemically toughened flat-glass pane fixed in a sloping position. Most of the cullet was kept off by a metal screen put in front. At least for experimental purposes, this simple form of protection has proved to be quite effective.

The conveying speed was adjusted to 1.3 m/s for the alignment belt and to 2.6 m/s for the double conveyor. Faster speeds, particularly for the double conveyor, would have been desirable for a better spacing or for a larger throughput, but due to the available short distance (1.5 m) for the acceleration of the test samples, the bottles do not have a stable position when passing the colour-detecting unit at a larger conveying speed. Also at the present speed of 2.6 m/s, lightweight samples tend to wobble past the colour detector and are, therefore, not correctly, if at all, ejected during their fall. The interaction of optics and mechanics is dependent upon very steady speeds and stable positions.

The tumbling of top-heavy bottles on the double conveyor is largely eliminated by covering the double conveyor, thus creating a tunnelling effect. The angle of pitch of the two belts amounts to 45° each.

4. Trial results

Using the described method of testing, two trial runs were carried out initially. It was the aim of these trials to separate amber and flint bottles from the oncoming mixed glass. Green and half-white samples, as well as all opaque material, were to pass the ejector station without the motor reacting. Flint glass bottles were to be directed to the right and amber bottles to the left and collected in containers via the installed chutes. Any arising pile-ups on the hopper and the alignment belt during the trial period were manually cleared with the help of a rod. The test results are summarised in table 1. Each trial period lasted for approximately 20 min.

The amount indicated as the total tonnage represents that amount of glass which passed through the colour-detecting unit and did not include the glass which was already sieved out on the feeder hopper or on the double conveyor.

Regarding the purity of the sorted colour glass, the amber glass quality is satisfactory for use as batch material. The green glass portions amounted to 0.9 and 1.3 %, respectively. The less interfering flint glass portions amounted to 0.7 and 4.2 %. These mainly resulted from flint glass bottles with red or yellow contents. The quality of the flint glass cullet is less satisfying. Here, product purities of 94.8 and 95.9 %, respectively, were obtained, thus considerably below the required values of almost 100 %.

Also, a better output efficiency for flint and amber bottles would have been desirable. In fact, 30 % of the flint and amber glass present ended up in the green glass container. This portion mainly results from opaque sorting at the colour-sorting unit and an inadequate efficiency during the sorting procedure, due to relative movements between the sample and the double conveyor. Considering the false-colour portions in the green glass container, it becomes obvious that a possible sorting out of ceramics from the oncoming mixed glass is useless because too large a glass portion is classified as opaque due to the high degree of contamination by dirt.

After further improvements were made at the transfer position alignment belt/double conveyor (a movable chute), also after the installation of carrier cams on the alignment belt, a new test run was started. At the same time improvements were carried out on the optics. The colour-recognition device had to be repeatedly adapted to "sample bottles" which were being constantly sorted as flint glass. These sample bottles were top-heavy, bellied and exceptionally thick-walled amber and green glass bottles which, due to their properties, were difficult to centre and lead to false results during colour detection. By changing the measurement field geometry and by suppressing the initial impulse during the run-in of the bottle into the light spot, this problem was solved. The test results are summarised in table 1 (test no. 3).

The results from test no. 3 were obtained trouble-free with a fully automatic test sequence. The installed cams prevented jams on the alignment belt. Jammed bottles on the plane-plate swing-sieve were

Table 1. Results of colour-separation trials on recycled container glass

test no. and container glas	initial test material			composition of initial test material after colour separation								
	total weight in kg	composition		green glass container			amber glass container			flint glass container		
		in kg	in %	portion of initial material		composition in the container	portion of initial material		composition in the container	portion of initial material		composition in the container
				in kg	in %	in %	in kg	in %	in %	in kg	in %	in %
test no. 1												
green glass	790.5	532.8	67.4	529.6	99.4	87.6	1.1	0.2	0.9	2.1	0.4	2.5
amber glass		146.2	18.5	40.9	28.0	6.8	104.0	71.1	98.4	1.3	0.9	1.6
flint glass		111.5	14.1	33.9	30.4	5.6	0.8	0.7	0.7	76.8	68.9	95.9
test no. 2												
green glass	849.8	505.6	59.5	499.5	98.8	86.0	1.5	0.3	1.3	3.0	0.6	2.0
amber glass		153.0	18.0	34.0	22.2	5.9	116.0	75.8	94.5	4.6	3.0	3.2
flint glass		191.2	22.5	47.4	24.8	8.2	5.2	2.7	4.2	138.8	72.6	94.8
test no. 3												
green glass	1105.3	621.2	56.2	611.2	98.4	84.2	5.0	0.8	2.4	5.0	0.8	2.7
amber glass		237.6	21.5	53.0	22.3	7.3	182.7	76.9	92.2	1.9	0.8	1.1
flint glass		246.5	22.3	61.6	25.0	8.5	10.9	4.4	5.4	174.0	70.6	96.2
test no. 4												
green glass	805.9	421.5	52.3	420.2	99.7	92.2	1.3	0.3	0.7	0.08	0.02	0.04
amber glass		193.0	24.0	24.7	12.8	5.4	167.1	86.6	95.7	1.4	0.7	0.7
flint glass		191.4	23.7	10.7	5.6	2.4	6.3	3.3	3.6	174.4	91.1	99.2

ignored. This leads, of course, to an increase in the small cullet portion due to a lower sieving efficiency. In this test, 1105.3 kg of glass were colour-sorted within 20 min. This corresponds to a throughput of 3.3 t glass/h. Despite the improved optics, the purities of the sorted product were of the same order of magnitude as in the two previous tests.

After a repeated run of the ejected false-colour bottles within the flint glass, colour recognition was correct. This leads to the conclusion that with unsatisfactory singling out of the samples a relatively high false-colour portion is the result. This means that a small piece of flint or amber glass positioned directly behind a green glass bottle causes simultaneous ejection of the green glass due to insufficient spacing.

Another phenomenon which leads to faulty sorting was recognised. In order to bridge a distance of 40 cm between the light spot and the ejector, the impulse for the starting of the motor must be passed on with a time delay. If, for instance, two objects are positioned between the light spot and the ejector, i.e. the second sample has already passed the measuring area although the first sample has not yet been ejected, then the colour recognition of the first bottle is lost and only the second one is taken into consideration. It can thus happen that flint or amber bottles are not ejected if a piece of green cullet follows at a short distance. A solution to this problem is undoubtedly an accurate singling out of the samples, which is only possible at a cost to the throughput. In order to minimise this problem it is desirable to place the measuring field directly in front of the ejector, so that immediately after colour recognition the impulse can be passed on to the ejector without any time delay. However, due to the local circumstances this could not be realised.

In order to investigate the influence of a careful singling out of the cullet, a last test was started simulating an optimum screening efficiency. In this test run more attention was paid to a correct singling out rather than to the time needed. Here, bottles and large pieces of glass arriving on the plane-plate swing-sieve were placed by hand onto the alignment belt. Oncoming small cullet was also screened out with the help of hand sorting. The results are shown in table 1 (test no. 4).

For statistical reasons, a similar total tonnage as in the previous tests was passed through. Of the arriving green glass, only 0.27 % could be found in the amber glass container and even less, only 0.02 %, in the flint glass container. Of the arriving flint glass, 3.29 % was sorted into the amber glass. This portion results from the red or yellow material present in the containers. The amber glass portion in the flint glass is somewhat more disturbing. The fact that 0.66 % of the oncoming amber glass could be traced to the flint glass container is probably due to glass breakage on

the way to the colour-recognition unit, despite singling out by hand, thus leading to the described missorting. The obtained yield of amber glass amounted to 86.59 and that of flint glass to 91.07 %. If one considers the colour purity of the flint glass, one is now in the range where the quality requirements of the container-glass manufacturer are almost being achieved.

The last test has shown that a high product purity of the colour-sorted cullet depends in the first place on the quality of the singling out of the glass containers. If, by means of a better screening technology, the interfering small glass pieces can be screened out, then the described process can result in good sorting results. With the elimination of the small cullet, an increase in the mean glass container weight is the automatic result. By raising the belt speed, the forecasted throughput efficiency of 5 t glass/h seems to be realistic. However, this requires more space for the double-belt conveyor in order to avoid relative movements between the glass container and the double belt.

The stringent quality requirements of the container glass industry for colour-sorted flint cullet (50 g of false colour/t cullet) for pure flint glass can probably not be achieved with this colour-sorting technology. It will happen again and again that bottle nests or widemouth containers filled with cullet will lead to faulty colours during the sorting process. Product purity can only be achieved by careful hand sorting or by mechanical negative selection from colour-sorted material. However, the obtained amber-glass quality does permit high cullet additions to the glass batch.

After completion of the test runs, no wear or tear worth mentioning could be detected on the whole conveyor system. The expected overheating of the stepping motor did not occur. The stepping losses during high motor loading were automatically readjusted. Some effort was needed to adjust the stepping motor to the requirements of the ejector mechanism. It is, therefore, advisable to consider other driving concepts in future, e.g. the use of a direct-current motor.

The form stability of the spring wires on the turnstile proved to be good. During the tests a few wires did break off which could, however, easily be removed from the glass due to their magnetic properties. The functioning of the ejector mechanism was not affected by this. Nevertheless, better wear-proof materials should be considered. Perhaps constructional alterations to the attachment of the wires will lead to an improvement.

5. Conclusions

The colour detector and the ejector system can be arranged in a compact design. Hence, a module arrangement is achieved which, by parallel switching, allows the throughput of the total system to be adjusted to the respective requirements.

The achieved throughput capacities (approximately 3 t cullet/h) and separation results give sufficient arguments for operating an economical colour-sorting unit within the scope of a glass-recycling plant. Potential solutions for increasing the purity of separated flint glass and for increasing the throughput capacity are in sight and can be realised when projecting a plant.

The calculated sorting costs amount to 12 to 15 DM/t flint glass. If an additional income, as compared to mixed cullet, for the additional amber glass is taken into consideration then, apart from a considerable decrease in the mixed cullet quantity, the economy of this colour-sorting technique becomes increasingly favourable.

*

The author wishes to express his thanks to the Umweltbundesamt, Berlin, and to the Fachvereinigung Behälterglasindustrie e. V., Düsseldorf, for financial support within the scope of the research programme no. 10301 158.

Thanks are also due to Heye-Glas, especially Herrn Prinner, for his readiness of cooperation and for the availability of a suitable site for the installation of the pilot plant. Furthermore, the author would like to thank Herrn Wurtscheid for the constructional and supervisionary work as well as Herrn Plöckl for the development of the colour-detecting system.

Finally, special thanks are due to Dr. Willing of the Umweltbundesamt, and Herrn Lubisch from the Bundesverband Glasindustrie und Mineralfaserindustrie e. V., Düsseldorf, for their good cooperation and support.

6. References

[1] Trier, W.: Einsatz von Altglasscherben zur Glasschmelze. Fachausschußbericht Nr. 71 der Deutschen Glastechnischen Gesellschaft. Frankfurt/M. 1978.

[2] Bundesverband Glasindustrie und Mineralfaserindustrie: Neues Abfallwirtschaftskonzept der Behälterglasindustrie: 12 Millionen DM für die Entlastung der Deponien. Presse-Mitt. „Glas Information“ no. 11/1990.

[3] Clasen, G. A.; Thomas, A.: Entwicklung einer Anlage zur Farbsortierung von Altglasscherben zur Wiederverwertung in der Hohlglasindustrie. Schlußber. z. Forschungsvorhaben (Förderungskennzeichen 14 30 041), Bundesministerium für Forschung und Technologie. Bonn 1981.

[4] Klumparendt, W.: Glas-Sortieranlage. German pat. no. 34 45 428. Appl. date 13 Dec. 1984, publ. date 21 Jan. 1988.

91R0003